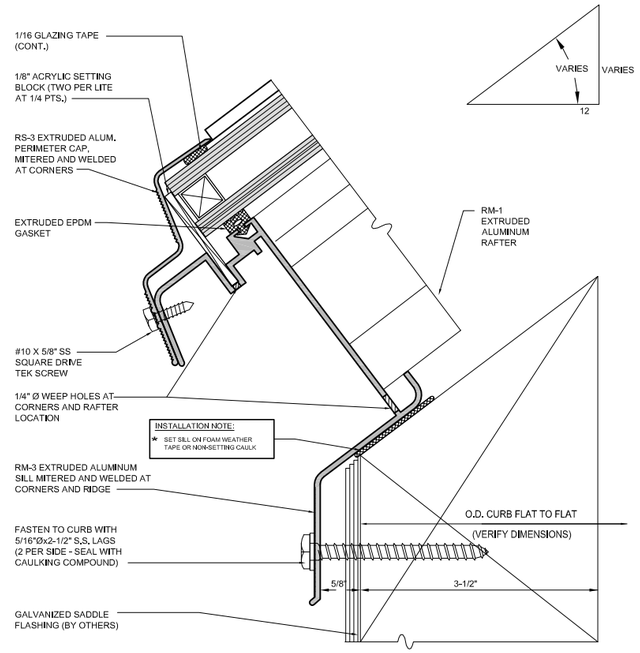

1/1 SILL
FULL

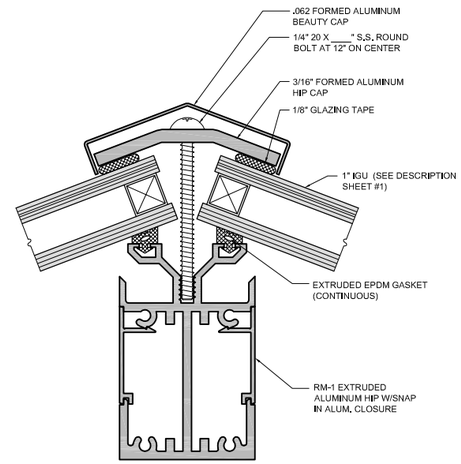

2/1 HIP
FULL

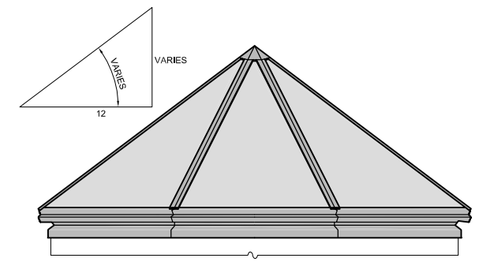

UNIT A
ELEVATION
3/4" = 1'

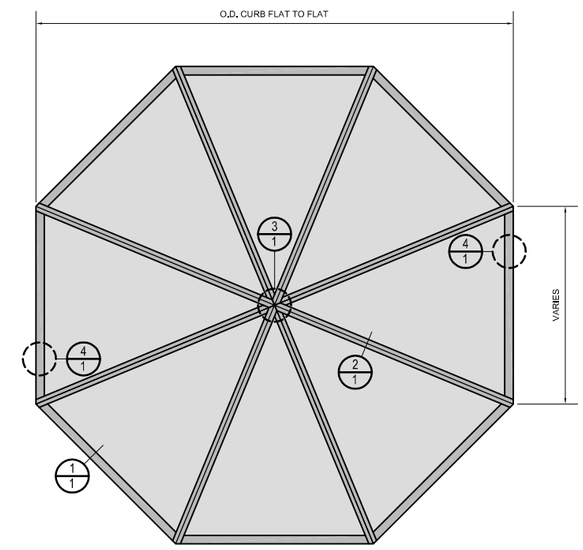

UNIT A
PLAN VIEW
3/4" = 1'

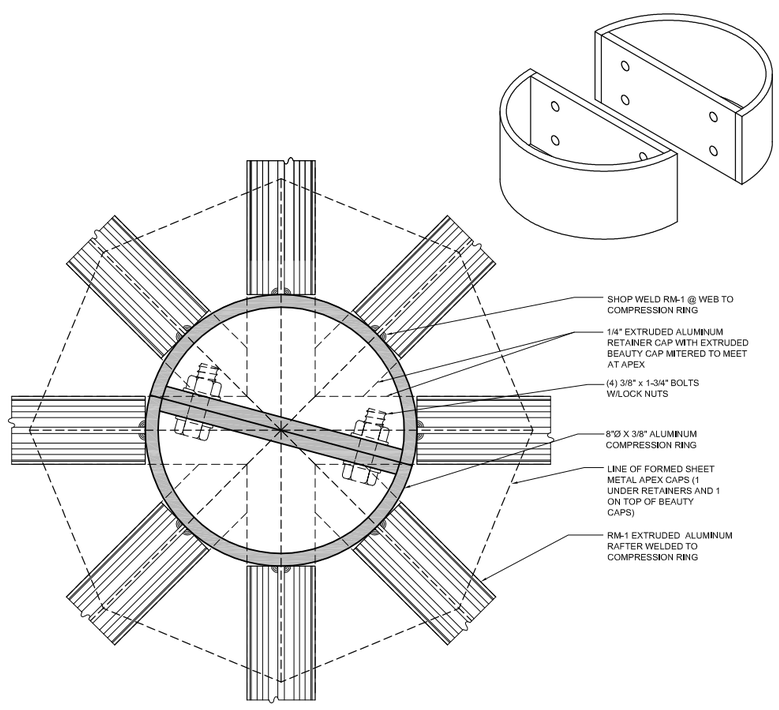

3/1 COMPRESSION RING
HALF

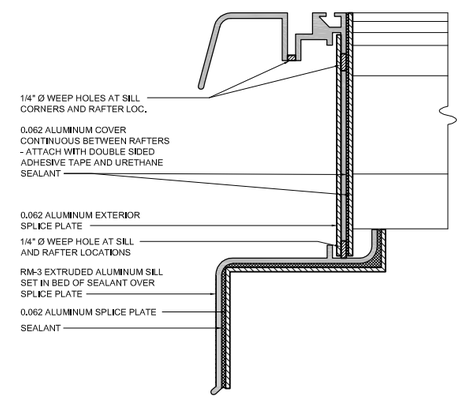

4/1 RM-3 SPLICE
FULL

SKYLIGHT SCHEDULE

UNIT	QTY.	TYPE	SLOPE	O.D. CURB DIM. (W X H)	GLASS TYPE	# LITES	GLAZING:
A		OCTAGON	:12			8	
							FINISH:
							COLOR:
							INSTALLATION:
							FIELD GLAZED ☐ SHOP GLAZED ☐

Royalite MANUFACTURING, INC
1055 TERMINAL WAY
SAN CARLOS, CA 94070
PHONE: (650) 637-1440
FAX: (650) 637-9770
www.royalite-mfg.com

JOB No.
DRAWN BY:
DATE:
PROJECT NAME:
CONTRACTOR:
PHONE:
SHEET No. 1 of 1
REVISED DATE: