Point of Measurement Confirmation

How should we fabricate to your dimensions?

Thank you for your dimensions. So your skylight is fabricated exactly as intended, please let us know which reference your dimensions are based on. A quick reply with A, B or C is all we need, or check a box below and send this page back.

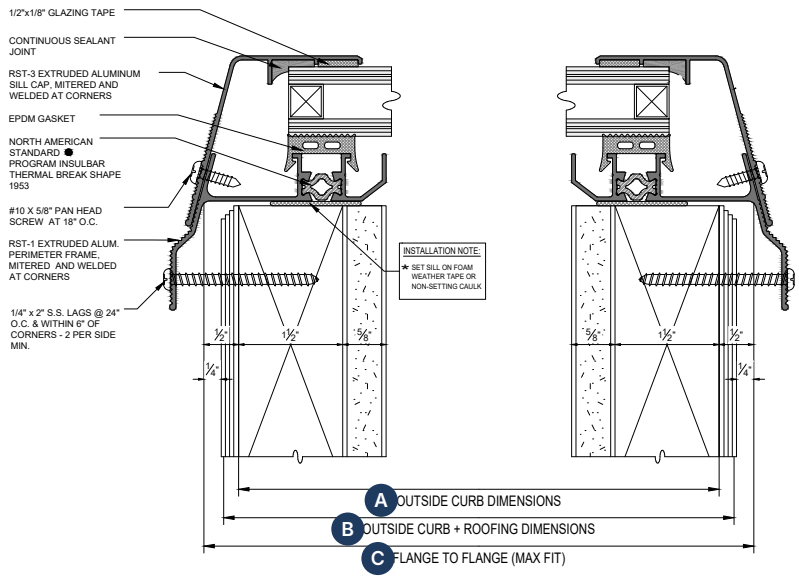

Fabricate to

Check one

- [ ] **A Outside curb**
  Fabricate to fit the outside of the curb, before roofing. Royalite adds its standard clearance of 1/2".
- [ ] **B Outside curb + roofing**
  Fabricate to fit over the curb with roofing installed. Royalite adds its standard clearance of 1/4".
- [ ] **C Flange to flange**
  Fabricate to the exact size provided. Clearance is already included in your dimensions.

Ordering an operable skylight?

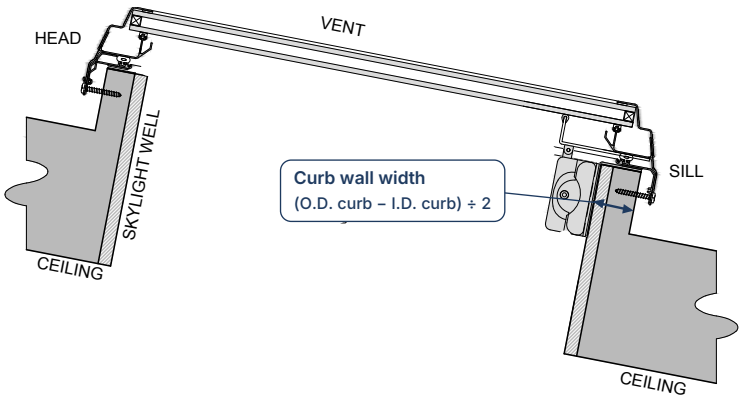

We will also need the inside curb dimensions (sheetrock to sheetrock). Most customers ask why, so here is the reason:

The operator mounts inside the light well and is supported by the sheetrock. We use your outside and inside curb dimensions to determine the overall curb wall width, which sets the length of the operator's bracket offset.

Curb wall width = (outside curb – inside curb) ÷ 2

Inside curb length (in.)		Inside curb height (in.)
	×	